Continental Disc® Corporation

Preparation and Installation of the POS-A-SET® Rupture Disc / POS-A-SET Insert Holder Assembly

WARNING

USER SHOULD READ AND THOROUGHLY UNDERSTAND THESE INSTRUCTIONS BEFORE INSTALLING RUPTURE DISC. THESE INSTRUCTIONS DO NOT PURPORT TO ADDRESS ALL OF THE SAFETY FACTORS ASSOCIATED WITH THE RUPTURE DISC'S USE IN SERVICE. IT IS THE RESPONSIBILITY OF THE USER TO ESTABLISH APPROPRIATE SAFETY, HEALTH, AND TRAINING MEASURES FOR THEIR PERSONNEL INSTALLING, SERVICING, OR WORKING IN AN AREA WHERE RUPTURE DISC ASSEMBLIES ARE IN USE. SERVICE AND/OR MAINTENANCE ON OR AROUND THE RUPTURE DISC DEVICE MUST NOT BE PERFORMED WHILE THE DEVICE IS SUBJECTED TO OPERATING PRESSURES AND/OR TEMPERATURES.

IT IS THE USER'S SOLE RESPONSIBILITY FOR DESIGN AND PLACEMENT OF RUPTURE DISCS WITHIN THEIR FACILITY AND UPON THE EQUIPMENT UPON WHICH THE RUPTURE DISC OF USER'S SELECTION IS TO BE LOCATED. IT IS USER'S SOLE RESPONSIBILITY FOR THE DESIGN OF ADEQUATE VENTING AND INSTALLATION OF ADEQUATE VENT PIPING OR DIRECTIONAL FLOW AFTER RUPTURE OCCURS WITH THE RUPTURE DISC AS INTENDED. WHEN SIZE IS SPECIFIED, CONTINENTAL DISC CORPORATION ASSUMES THAT ADEQUATE PROVISIONS HAVE BEEN MADE BY PURCHASER FOR PROPER VENTING OF A SYSTEM TO RELIEVE THE SPECIFIC PRESSURE. LOCATE RUPTURE DISC WHERE PEOPLE OR PROPERTY WILL NOT BE EXPOSED TO THE SYSTEM DISCHARGE IN CASE OF RUPTURE. VENT TOXIC OR FLAMMABLE FUMES OR LIQUIDS TO A SAFE LOCATION TO PREVENT PERSONAL INJURY OR PROPERTY DAMAGE.

IT IS THE USER'S SOLE RESPONSIBILITY TO SPECIFY THE BURST PRESSURE RATING OF A RUPTURE DISC AT A COINCIDENT TEMPERATURE AT WHICH THE RUPTURE DISC IS TO BE USED. A RUPTURE DISC IS A TEMPERATURE SENSITIVE DEVICE. THE BURST PRESSURE OF THE RUPTURE DISC IS DIRECTLY AFFECTED BY ITS EXPOSURE TO THE COINCIDENT TEMPERATURE. GENERALLY, AS THE TEMPERATURE AT THE RUPTURE DISC INCREASES, THE BURST PRESSURE DECREASES; INVERSELY, AS THE TEMPERATURE AT THE RUPTURE DISC DECREASES, THE BURST PRESSURE MAY INCREASE. FAILURE TO PROPERLY UTILIZE A RUPTURE DISC AT THE SPECIFIED COINCIDENT TEMPERATURE COULD CAUSE PREMATURE FAILURE OR OVERPRESSURIZATION OF A SYSTEM.

THE INSTANTANEOUS RELEASE OF PRESSURE FROM THE RUPTURE DISC CAN CREATE VIOLENT NOISES DUE TO THE DISCHARGE AT SONIC VELOCITY. IT IS THE USER'S SOLE RESPONSIBILITY TO PROTECT AGAINST HEARING DAMAGE TO ANY BYSTANDERS.

RUPTURE DISCS AND TAGS ARE MADE OF METAL FOILS OF VARYING THICKNESS. THE METAL EDGES MAY BE SHARP. PERSONNEL INSTALLING OR EXAMINING THE RUPTURE DISCS SHOULD PROTECT AGAINST CUTS OR INJURY WHEN HANDLING THE RUPTURE DISC. DO NOT LIFT A RUPTURE DISC BY ITS ATTACHED TAG.

PARTICLES MAY BE DISCHARGED WHEN THE RUPTURE DISC RUPTURES. THESE PARTICLES MAY BE PART OF THE RUPTURE DISC ITSELF, OR OTHER ENVIRONMENTAL MATTER IN THE SYSTEM. IT IS THE USER'S SOLE RESPONSIBILITY TO ASSURE THAT THESE PARTICLES ARE DIRECTED TO A SAFE AREA TO PREVENT PERSONAL INJURY OR PROPERTY DAMAGE.

THERE IS NO GUARANTEE OF RUPTURE DISC LIFE. SUCH LIFE SPAN IS AFFECTED BY CORROSION, CREEP AND FATIGUE, AND PHYSICAL DAMAGE. THESE CONDITIONS WILL DERATE THE RUPTURE DISC TO A LOWER SET PRESSURE. THE CUSTOMER AND/OR USER SHOULD BE PREPARED TO HANDLE PREMATURE FAILURE OF THE RUPTURE DISC. THE MEDIA OR OTHER ENVIRONMENTAL CONDITIONS SHOULD NOT ALLOW ANY BUILDUP OR SOLIDIFICATION OF MEDIA TO OCCUR ON A RUPTURE DISC. THIS MAY INCREASE THE PRESSURE SETTING OF THE RUPTURE DISC.

CUSTOMER AND/OR ITS INSTALLER SHALL BE SOLELY RESPONSIBLE FOR THE PROPER INSTALLATION OF SELLER'S HOLDERS AND RUPTURE DISCS INTO A SYSTEM. CUSTOMER AND/OR ITS INSTALLER SHALL BE SOLELY RESPONSIBLE FOR IMPROPER INSTALLATION AND PHYSICAL DAMAGE RESULTING THEREFROM, INCLUDING BUT NOT LIMITED TO, DAMAGE RESULTING FROM LEAKAGE, IMPROPER TORQUING OR SEATING OF A RUPTURE DISC OR FAILURE TO FOLLOW INSTALLATION INSTRUCTIONS WHERE PROVIDED.

RUPTURE DISCS ARE PRECISION SAFETY DEVICES AND MUST BE INSTALLED PROPERLY. RUPTURE DISCS MUST BE INSTALLED BY TRAINED, KNOWLEDGEABLE INSTALLERS AND ONLY WITHIN ENVIRONMENTS SUITABLE AND APPROPRIATE FOR A RUPTURE DISC. CARE MUST BE USED IN A FACILITY'S DESIGN TO PROTECT BOTH THE RUPTURE DISC FROM INADVERTENT DAMAGE WHICH COULD CAUSE ITS PREMATURE RELEASE AND TO PROTECT INDIVIDUALS EXPOSED TO HAZARDS CREATED BY SUCH SUDDEN RELEASE.

PROPER INSTALLATION OF A RUPTURE DISC IS CRITICAL TO PERFORMANCE AND TO SAFETY. FAILURE TO PROVIDE PROPER SEATING OF A RUPTURE DISC MAY AFFECT RUPTURE DISC PERFORMANCE, BURST PRESSURE ACCURACY AND MAY RESULT IN ITS PREMATURE FAILURE.

I. Safety Precautions Before Installation

1. The knifeblades are razor sharp. Care must be taken during handling to prevent serious bodily injury. The knifeblades must be free of corrosion, nicks, or bent points to ensure proper performance. If any of these conditions exist, the rating of the rupture disc will increase beyond the original rupture pressure rating.

2. The POS-A-SET rupture disc is a precision instrument and must be handled with extreme care. Rupture discs should be installed only by qualified personnel familiar with rupture discs and proper piping practices.

3. Do not install rupture disc if there is any damage in the dome area. A damaged rupture disc is any rupture disc with visible nicks or dents in the dome.

4. See rupture disc tag to verify set pressure, operating temperature, and all other operating parameters.

II. Preparation of Holders for Installation

New Installation

Clean all foreign material from the rupture disc sealing area of both the holder inlet and outlet.

Replacement Installation

1. If the Burst Disc Indicator (B.D.I.®) Alarm System is used, disconnect the alarm strip from the monitor by unplugging the B.D.I. connector from the lead wire connector.

2. Remove the holder from the system and place on a flat surface. The knifeblades should be pointing up.

3. Disassemble the holder by loosening the pre-assembly screws on the holder outlet. Lift the holder outlet up and set aside; then remove the burst rupture disc components.

4. Clean the rupture disc sealing area of both the holder inlet and outlet. These surfaces must be completely clean and free of all rust, corrosion, and foreign material to ensure a proper seal. Use of solvents, steel wool, or fine emery cloth is permissible. Do not re-machine. Do not use scraper or abrasives.

5. Inspect the rupture disc sealing area for nicks, scratches, or pitting. If any of these conditions are present, consult the factory for repair.

6. **EXAMINE THE KNIFEBLADE CONDITION. BLADE EDGES AND POINTS MUST BE SHARP TO ENSURE PROPER RUPTURE DISC FUNCTION. DO NOT INSTALL RUPTURE DISC IF BLADE EDGES OR POINTS ARE DAMAGED OR CORRODED. IF BLADES ARE IN NEED OF SHARPENING OR REPLACEMENT, THIS MUST BE PERFORMED AT THE FACTORY.**

7. Remove any adhered gasket material from previous installation.

III. Assembly of the Rupture Disc and Holder (See Figure A)

Component parts of the POS-A-SET assembly are illustrated in the proper installation sequence.

1. Carefully remove and discard any shipping protectors furnished with rupture discs or holder. **DO NOT INSTALL A SHIPPING PROTECTOR IN A HOLDER ASSEMBLY**.

2. Place the holder outlet on a flat surface with the knifeblades and the alignment pins pointing up.

3. Position all separate rupture disc components on the alignment pins with the dome side up in the sequence shown. When installing a factory assembled rupture disc, the entire unit is placed on the alignment pins, dome side up. Do not separate or rearrange component parts. If replacing a top section, seal assembly, or vacuum girdle with "Spare Parts", remove and disassemble the original rupture disc. Remove and discard the component being replaced. Reassemble the rupture disc and "Spare Part" on the holder alignment pins in the sequence shown in **Figure A**.

Figure 'A'

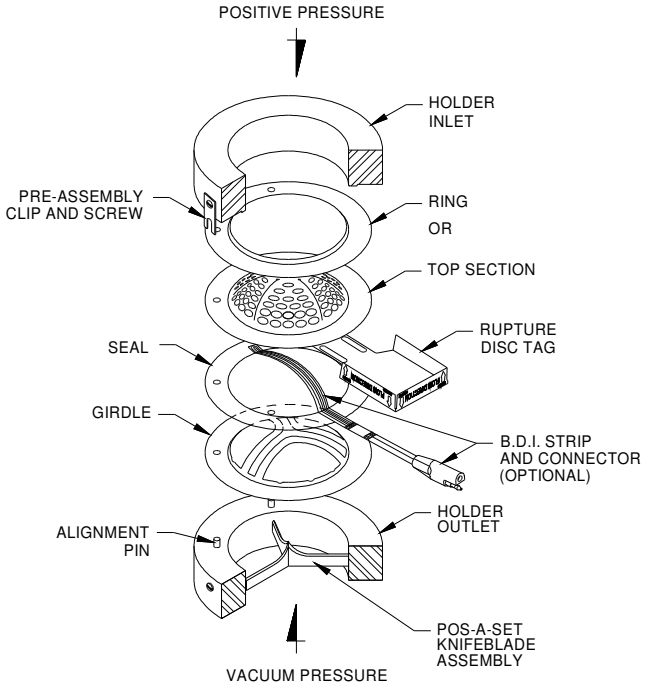

4. If the B.D.I. Alarm System is used, visually inspect the adhesion of the strip to the seal and the electrical circuit. If the strip has become detached or the circuit has been broken,
DO NOT INSTALL THE RUPTURE DISC. Ensure that the B.D.I. connector tail extends straight and flat across the holder seat.

5. Align and lower the holder inlet carefully onto the alignment pins in the holder outlet, ensuring that the rupture disc is not damaged.

6. Fasten the assembly together by tightening the pre-assembly screws.

7. At this point, the holder assembly is upside down. Invert assembled rupture disc and holder.

Figure 'B'

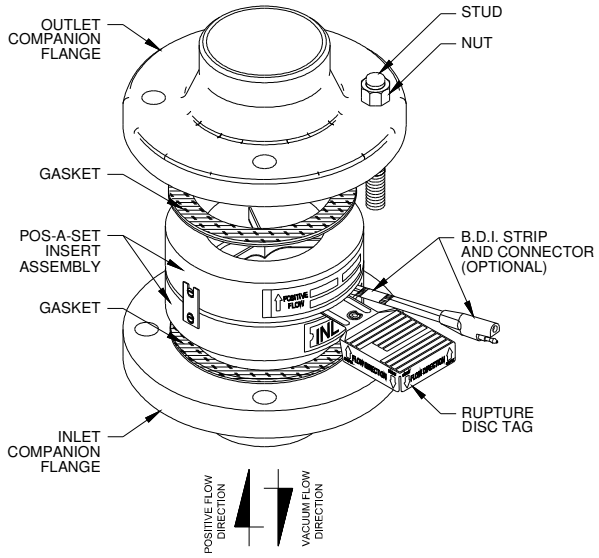

IV. Installation of the POS-A-SET Insert Assembly Into the System (See Figure B)

1. Before placing the assembly into the system, ensure that the companion flange gasket surfaces are clean and free of all rust, corrosion, and foreign material.

2. A J-Hook (optional) may be provided in the holder inlet to ensure correct installation of the assembly relative to flow direction. If the J-Hook is used, the corresponding inlet companion flange must be drilled to accommodate the J-Hook prior to installation of the assembly. Refer to the J-Hook Installation Guide for locating and drilling specifications.

3. Install the POS-A-SET INSERT assembly and customer furnished gaskets **WITH ALL FLOW ARROWS POINTING IN THE PROPER FLOW DIRECTION** and the J-Hook (if furnished) inserted into the drilled companion flange.

Figure 'C'

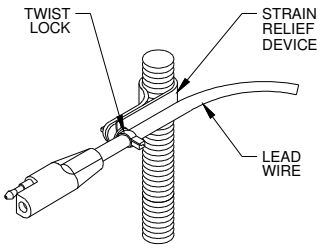

4. If the B.D.I. Alarm System is used, installation of the strain relief device is required (see **Figure C**). Slip the strain relief device over one companion flange stud as shown. Locate the device near where the B.D.I. strip exits. Allowing sufficient slack for easy connection to the B.D.I. connector, secure the lead wire to the strain relief device by fastening the twist lock on the clip.

5. Install lightly oiled, free running studs and nuts to finger tightness. Using a cross torquing pattern (see **Figure D**), torque each nut with a calibrated torque wrench at 20% increments of recommended torque value (see **Table 1**). Repeat 20% increments and cross torquing pattern until final torque value is achieved. Recheck all nuts in rotational sequence at final torque value. These values are based on using gasket materials having a gasket factor of 2.75, gasket seating stress of 3,700 psi, and stud and nut material per ASME SA193-B7 and SA194-2H respectively, with a stress of up to 25,000 psi. The use of studs and nuts with lower strength may prove unsatisfactory.

Figure 'D'

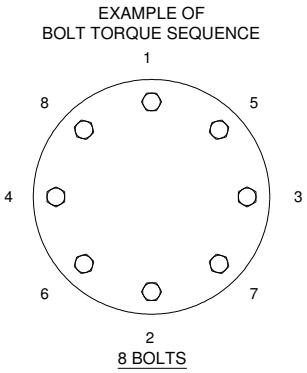

6. If the B.D.I. Alarm System is used, plug the B.D.I. connector into the lead wire connector using a slight twisting action.

V. Preventative Maintenance

1. Risk assessment and an annual rupture disc replacement are recommended. Rupture disc service life is determined by system operating conditions. The effects of severe pressure/vacuum cycles, corrosion, temperature variations, or other adverse conditions must be evaluated by the user through actual service experience to determine optimal service life.

2. **IF THE RUPTURE DISC IS NOT REPLACED PERIODICALLY WHEN EXPOSED TO THESE CONDITIONS, PREMATURE FAILURE OF THE RUPTURE DISC MAY OCCUR, THEREBY DISCHARGING THE PROCESS MEDIA.**

3. To avoid extended downtime, maintain three spare rupture discs in stock at all times for each holder in use. The number of spares required ultimately will be determined by service conditions.

VI. Clean Out of Place (COP) for 3A Service

1. Due to the design of the POS-A-SET rupture disc, per 3-A® Sanitary Standard for Rupture Disc Assemblies Number 60-01, the Top Section, reference **Figure 'A'**, shall be cleaned out of place. Not all components shown in **Figure 'A'** may be present.

2. Using a knife or other sharp instrument, cut each piece of tape that holds the rupture disc assembly together. The rupture disc assembly must be disassembled to allow for proper cleaning between each component.

3. Carefully disassemble the rupture disc assembly into its individual components. Take care not to damage any of the individual components when disassembling the rupture disc. **Damage to any of the components could cause the rupture disc to leak, burst at an undesired pressure, or not operate as expected.**

4. It is recommended that the Top Section be cleaned using ultrasonic cleaning methods. The ultrasonic cleaning solution shall be nontoxic and appropriate for product contact surfaces and types of process residues. If desired, ultrasonic cleaning methods can also be used to clean all the components of the rupture disc assembly, **except for seals with B.D.I.'s attached to them.** Seals with B.D.I.'s should be carefully wiped clean by hand with a cleaner that is nontoxic and appropriate for product contact surfaces and types of process residues. Otherwise, the seal and B.D.I. should be replaced. **Submerging the B.D.I. or using caustic chemicals to clean it could damage the B.D.I.**

5. Once all the components of the rupture disc assembly are clean, examine each component for damage. If damage is present (tears, holes, etc.), consult the factory. If no damage is present, reassemble the rupture disc, reference **Figure 'A'**. Ensure that the holes that are present in all the components are lined up. Otherwise, the rupture disc assembly will not fit in the rupture disc holder.

6. Tape can be used to keep the rupture disc assembly together prior to installation. Use a thin filament tape with a nontoxic adhesive. Only use tape on the outermost area of the outer diameter of the rupture disc. The tape shall not extend further than 0.25" (6 mm) past the outer diameter of the rupture disc.

VII. Customer Service

If you wish to discuss your application, installation, or maintenance, please contact the Customer Service Department at our headquarters location.

B.D.I. ALARM SYSTEM OPERATING LIMITS

TEMPERATURE: -40° F to + 400° F
(-40° C to + 204° C)

MAX CURRENT: 50 Milli Amps
MAX VOLTAGE: 24 VDC

FULFILLS THE REQUIREMENTS OF DIRECTIVE 94/9/EC (ATEX) FOR: Equipment or protective system intended for use in potentially explosive atmospheres.

Conformity assessment performed by Notified Body no. 0359,
Intertek Testing and Certification Limited, Leatherhead, Surrey, UK.

BURST DISC INDICATOR (B.D.I.®): Sizes 25mm through 900mm (1 inch through 36 inches)

Marked: II 2 G, Ex ia IIC Gb
II 2 D, Ex ia IIIC Db
(Tamb = -40° C to +204° C)

EC Type Examination Certificate: ITS03ATEX21357U

THE MAXIMUM INTRINSICALLY SAFE INPUT PARAMETERS ARE AS FOLLOWS:

Ui = 24V dc
Ii = 50 mA
Pi = 0.3W

THE EQUIVALENT PARAMETERS ARE:

Ci = 0
Li = 0

SPECIAL CONDITIONS FOR SAFE USE:

1. The arrangements for connection of the external circuits must comply with the requirements of clause 6.2 of EN 60079-11:2012.

2. The component must be housed in an enclosure which provides a degree of protection of at least IP 20.

3. The final installation shall comply with the 500 volt electrical strength test requirement of clause 6.3.12 of EN 60079-11:2012.

4. The installation shall prevent electrostatic charging of the BDI strip, which is non-conductive and may exceed the surface area limitations of EN 60079-0:2012 clause 7.4.2.

Recommended Torque Values for POS-A-SET (FS) Rupture Disc Sizes 3" Through 12"

TABLE 1

SIZE		COMPANION FLANGE RATING			RECOMMENDED TORQUE VALUE	
IN	MM	ANSI	DIN	JIS	FT•LB	N•m
3	80	150	---	---	40	54
3	80	---	10/16	10	20	27
3	80	---	---	16	25	34
4	100	150	10/16	10	30	41
4	100	---	---	16	38	52
6	150	150	---	---	40	54
6	150	---	10/16	10	42	57
6	150	---	---	16	31	42
8	200	150	---	---	50	68
8	200	---	10	---	52	70
8	200	---	16	10	35	47
8	200	---	---	16	38	52
10	250	150	---	---	70	95
10	250	---	10	---	63	85
10	250	---	---	10	69	94
10	250	---	16	16	76	103
12	300	150	---	---	80	108
12	300	---	10	---	72	98
12	300	---	---	10	59	80
12	300	---	16	---	86	117
12	300	---	---	16	65	88

Continental Disc®
Corporation

Performance Under Pressure®

HEADQUARTERS //
3160 W. Heartland Drive
Liberty, MO 64068 USA
Ph (816) 792-1500
Fax (816) 792-2277
sales@contdisc.com
contdisc.com

Continental Disc Corporation reserves the right to alter the information in this publication without notice.
Reproduction without written permission prohibited. ©2004, 2008, 2010, 2011, 2012, 2013, 2014 Continental Disc Corporation Printed in U.S.A.